MURR ELEKTRONIK
stay connected

M12 male 0° A-cod. IDC

4-pol., 0.25 - 0.5mm², 4 - 5,1mm

Male straight
M12, 4-pole
IDC terminals
Connection cross section: 0.25...0.5 mm²
Art-No. 7005 - M12 Lite - (plastic hexagonal screw) on request
The resistance to aggressive media should be individually tested for your application. Further details on request.

Link to Product

Illustration

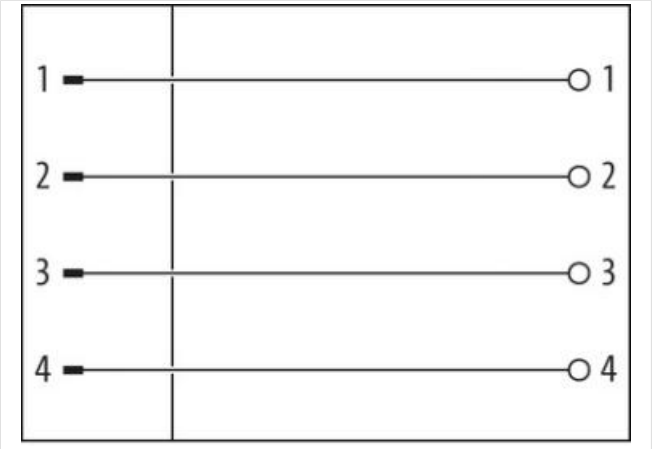

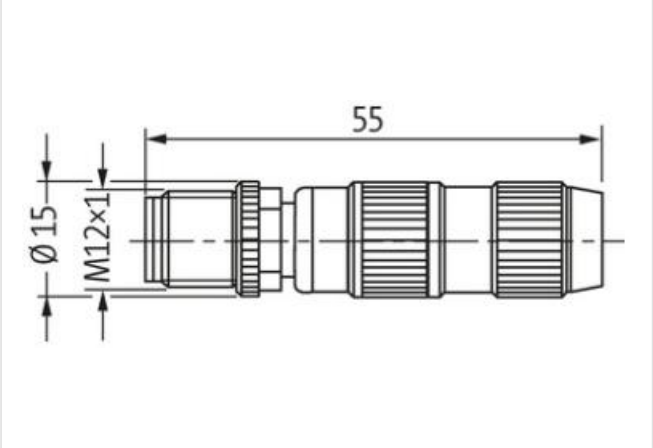

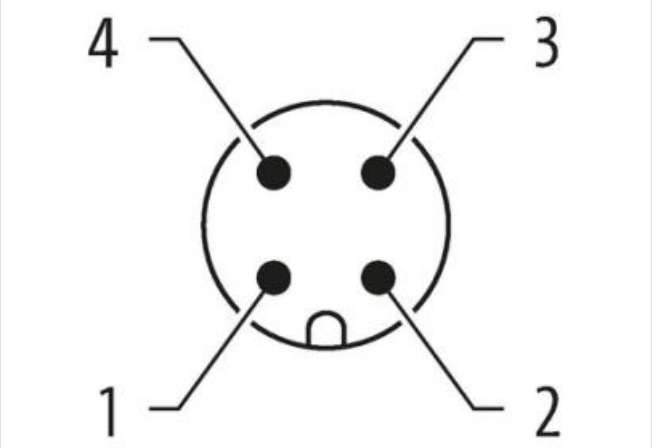

Product may differ from Image

Side 1	
Degree of protection (EN IEC 60529)	IP67

Commercial data	
ECLASS-6.0	27279221
ECLASS-6.1	27260702
ECLASS-7.0	27440102
ECLASS-8.0	27440102
ECLASS-9.0	27440116
ECLASS-10.1	27440102

The information in this Product-PDF has been compiled with the utmost care.
Liability for the correctness completeness and topicality of the information is restricted to gross negligence. Version: 2024-06-10

ECLASS-11.1	27440102
ECLASS-12.0	27440116
ETIM-5.0	EC002635
customs tariff number	85366990
GTIN	4048879201841
Packaging unit	1
Electrical data | Supply	
Operating voltage AC max.	32 V
Operating voltage DC max.	32 V
Current operating per contact max.	4 A
Installation	
Connection cross section min.	0,25 mm²
Connection cross section max.	0,5 mm²
Single wire diameter min.	0,1 mm
Installation | Connection	
Wire insulation diameter min.	1,2 mm
Wire insulation diameter max.	1,6 mm
Tightening torque	0,6 Nm
Device protection | Electrical	
Additional condition protection degree	screwed, mounted
Rated surge voltage	0,8 kV
Material group (IEC 60664-1)	III
Mechanical data | Mounting data	
Mounting method	inserted, screwed, Shaking protection
Clamping range min.	4 mm
Clamping range max.	5,1 mm
Height	55 mm
Width	15 mm
Depth	15 mm
Environmental characteristics | Climatic	
Operating temperature min.	-25 °C
Operating temperature max.	85 °C
Important installation notes	
Note on strain relief	Protect the connectors by suitable measures from mechanical loads, e.g. by the usage of cable ties.
Note on bending radius	**Attention:** Observe the permissible bending radii when laying cables, as the IP protection class can be endangered by excessive bending forces.

The information in this Product-PDF has been compiled with the utmost care.
Liability for the correctness completeness and topicality of the information is restricted to gross negligence. Version: 2024-06-10